DynoRaxx® DynoGrip Evolution FR

Quick Installation Guide

Quick Installation Instructions

Site plans are often completed assuming perfectly flat rooftops and geometrically symmetric arrays. In the field this is rarely the case. The DynoGrip Evolution FR system's modular design allows for versatile design and installation. Please follow these installation guidelines to ensure an efficient installation.

DynoRaxx DynoGrip Evolution FR Components:

Two Leg Basket

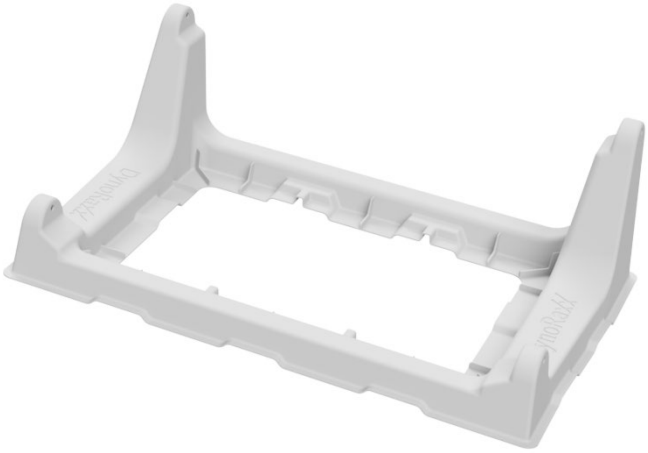

Four Leg Basket

DynoGrip

DynoPin or Equal

Step 1: Begin installation by snapping a chalk line to square and center the system. Properly align this square within the building zones and dimensions allotted by the design engineer.

Step 2: Place a two leg basket with the legs facing South in the Southeast corner of the chalk line. It's imperative that extra care is taken to make sure this basket is oriented correctly since any imperfections will be magnified exponentially as you move further through the installation. For large systems, starting from the center of the system and working east and west will limit the effect of inaccurate measurements.

Step 3: Place a four leg basket approximately one and a half (1.5) feet north of the two leg basket oriented with the tall legs facing south. Place a second set of baskets approximately two (2) feet from the western edge of the first pair of baskets. This distance will vary depending on the dimensions of the solar panels being installed.

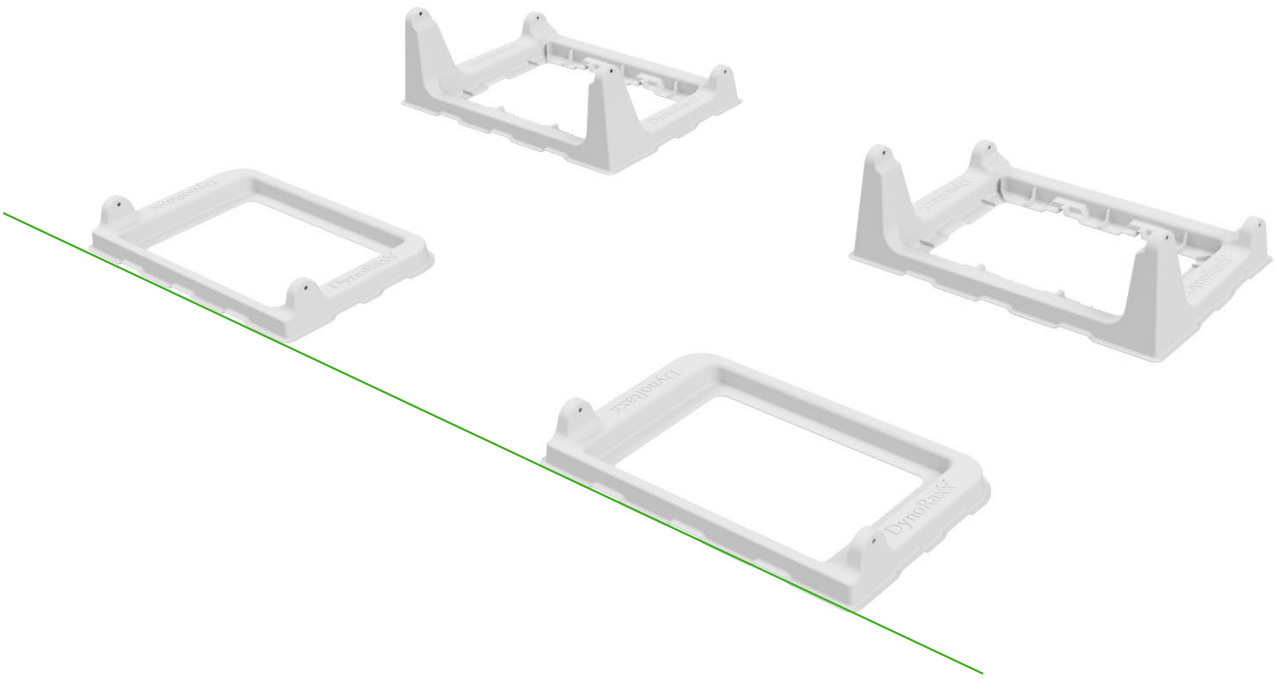

Step 4: While solar panels are on the pallet, using a T-Square mark the panel fourteen (14") inches in from the short side at four locations along the long sides of the panel. This line will serve as the setting point for the DynoGrip. Refer to Appendix A for more details. ONLY INSTALL 4 DYNOGRIPS PER PANEL

Step 4: Remove top panel and lean panel against stacked pallet.

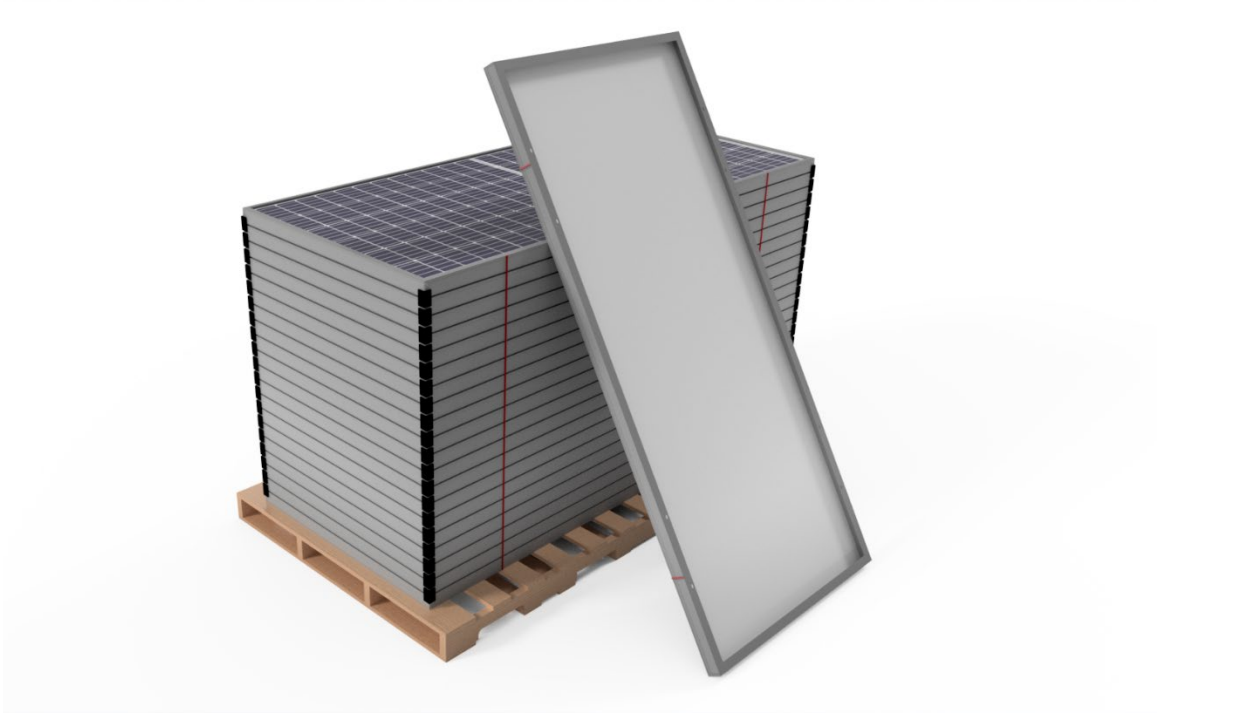

Step 5: Install DynoGrip at all 4 chalk lines by releasing lever, putting grip over the top of the bottom lip flange, and closing lever until locked in place. Ensure grip is seated properly against edge of bottom lip flange as outlined below. Lever highlighted below in Green. All portions of the DynoGrip are 304 Stainless Steel. ONLY INSTALL 4 DYNOGRIPS PER PANEL

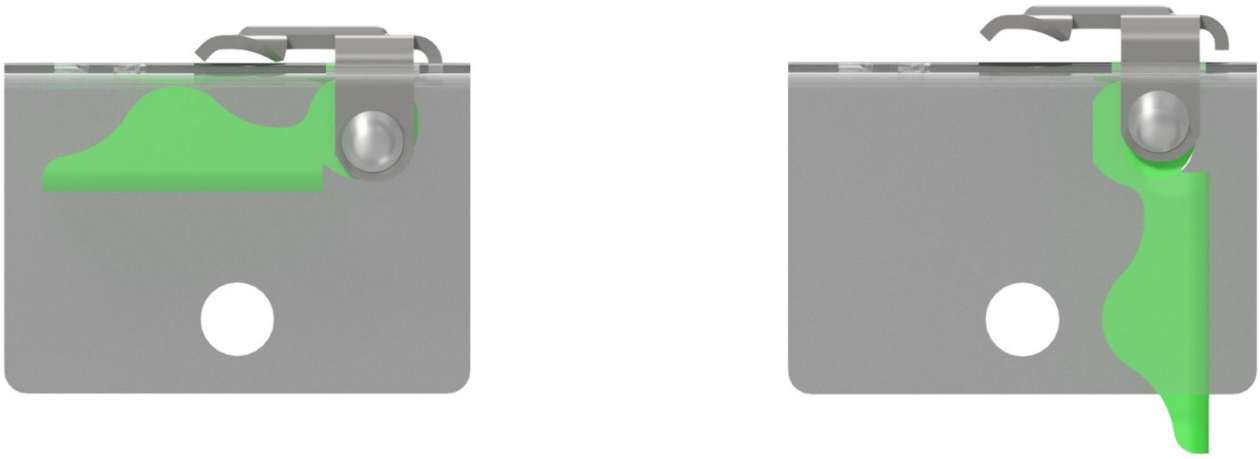

Release Lever

Ensure module frame abuts clamps "squaring" legs. This will square the clamp to the module.

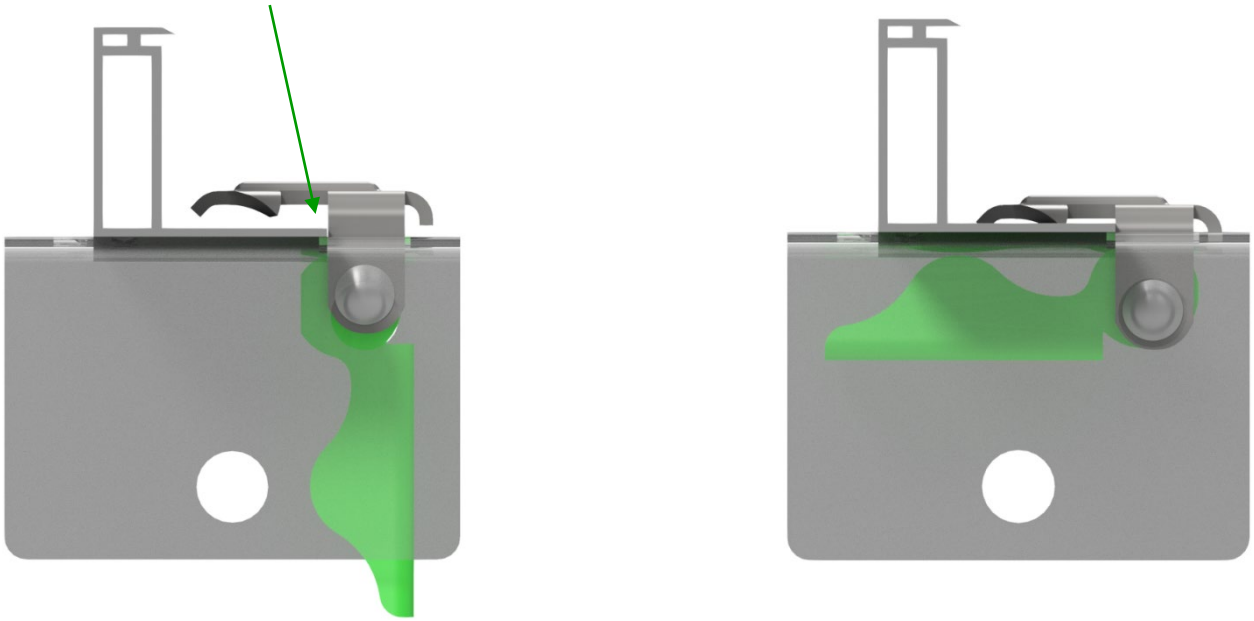

Close Clamp over module's bottom lip flange

Step 5:

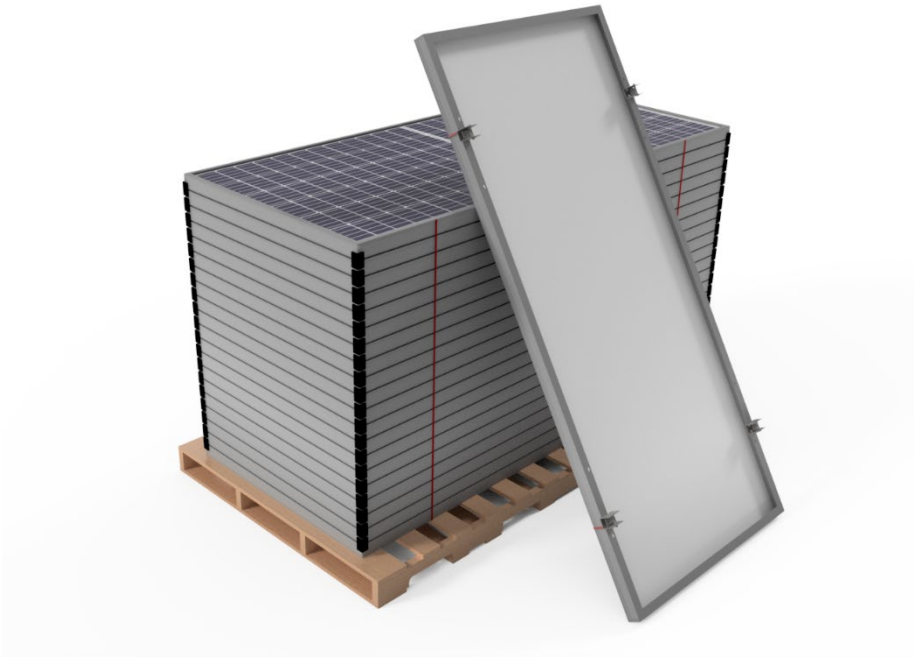

Step 6: Place the first solar panel onto the appropriate legs of each basket. The second set of baskets may need to be slid into place to fit into the DynoGrip. Insert the DynoPin into all four DynoGrips attaching the module to the baskets. Please take special care and adjust module and baskets to stay aligned with initial chalk line. ONLY INSTALL 4 DYNOGRIPS PER PANEL

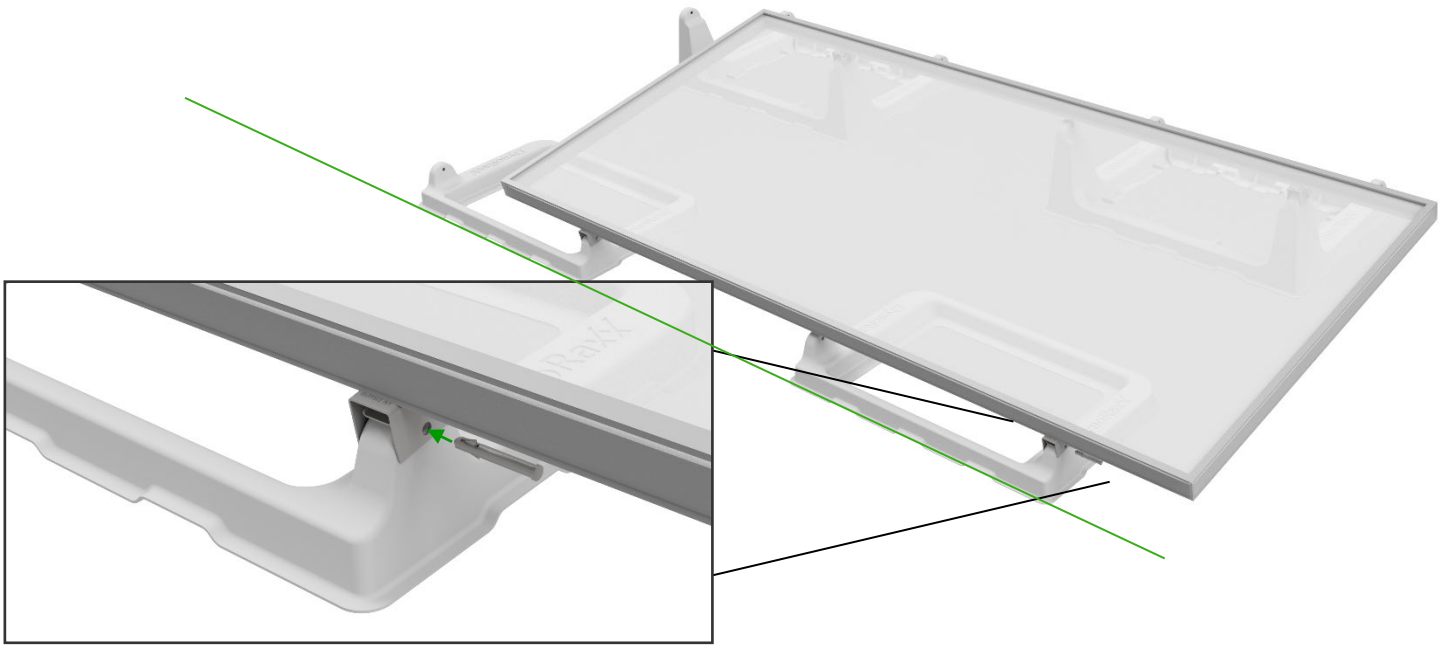

Step 7: Place the third set of Baskets approximately two feet (2’) west of the second set and reposition them so that the second solar panel attaches to the legs on this set of baskets in the same fashion as step 6.

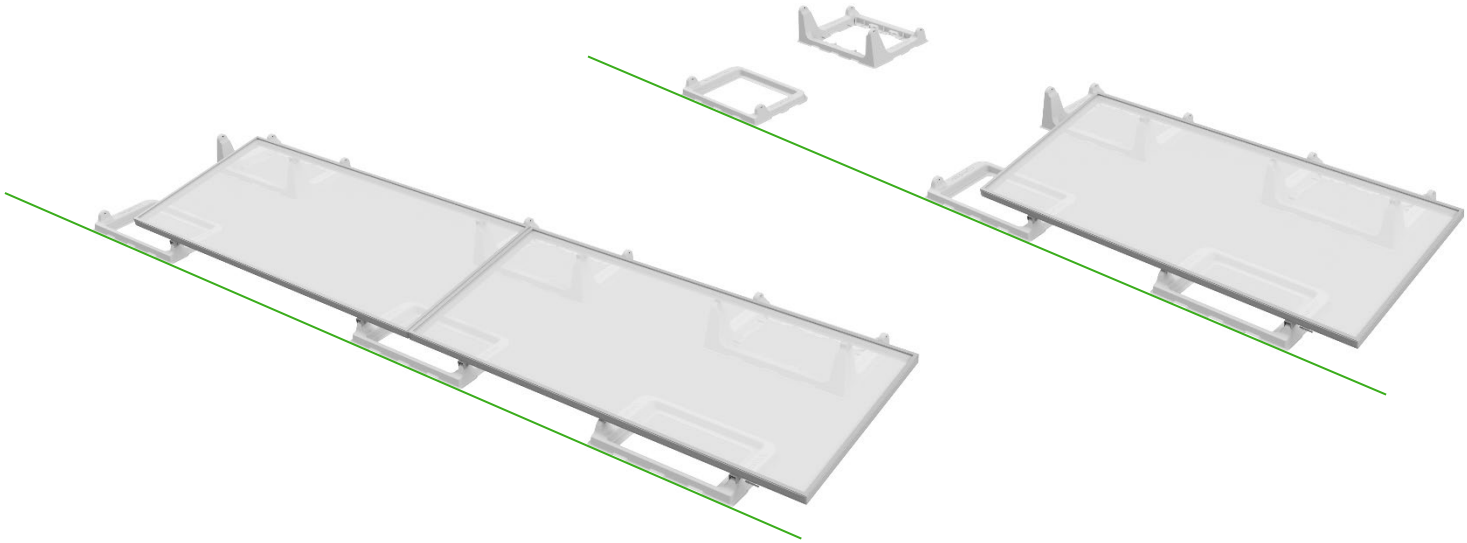

Step 8: Continue the row in the same manner as step 6. When an obstacle impedes further progression of a column, end the column by placing a four leg basket oriented with the short legs facing south.

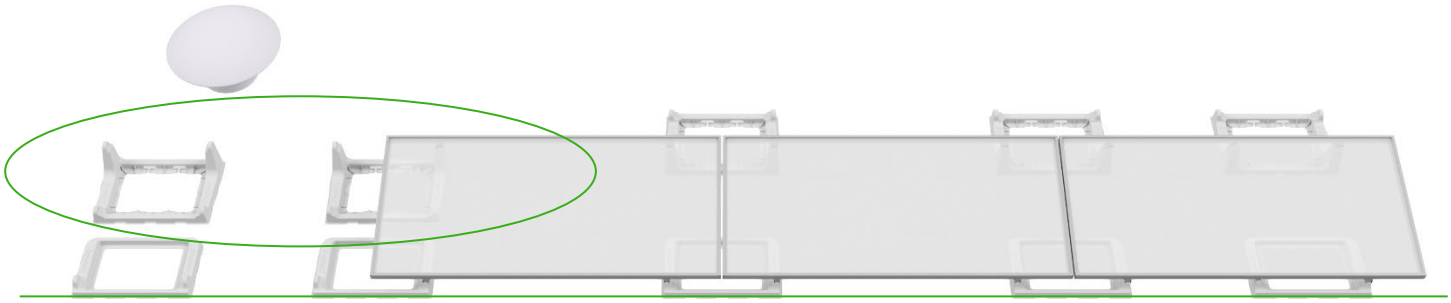

Step 1

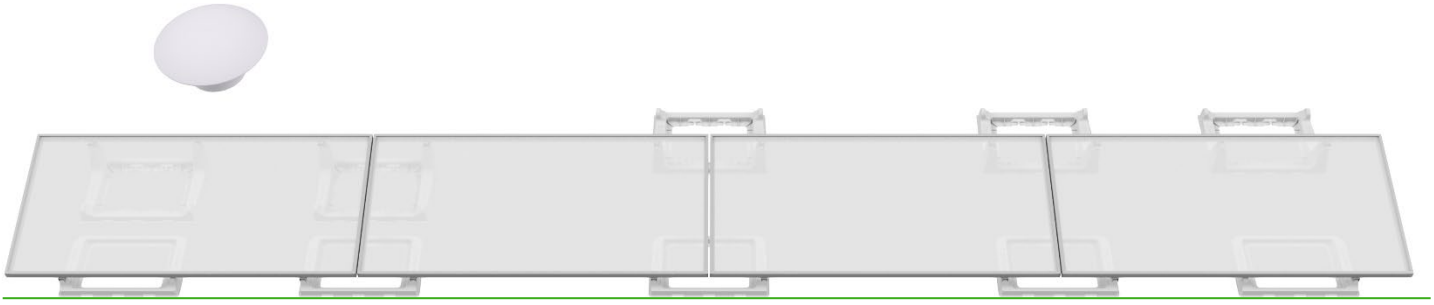

Step 2

Step 9: Once the first row of modules is in place the baskets for the remainder of the system can be laid out in the general area of where the modules will be installed. Start every additional row beginning on the eastern side of the array. Place four leg baskets positioned with the tall legs facing south.

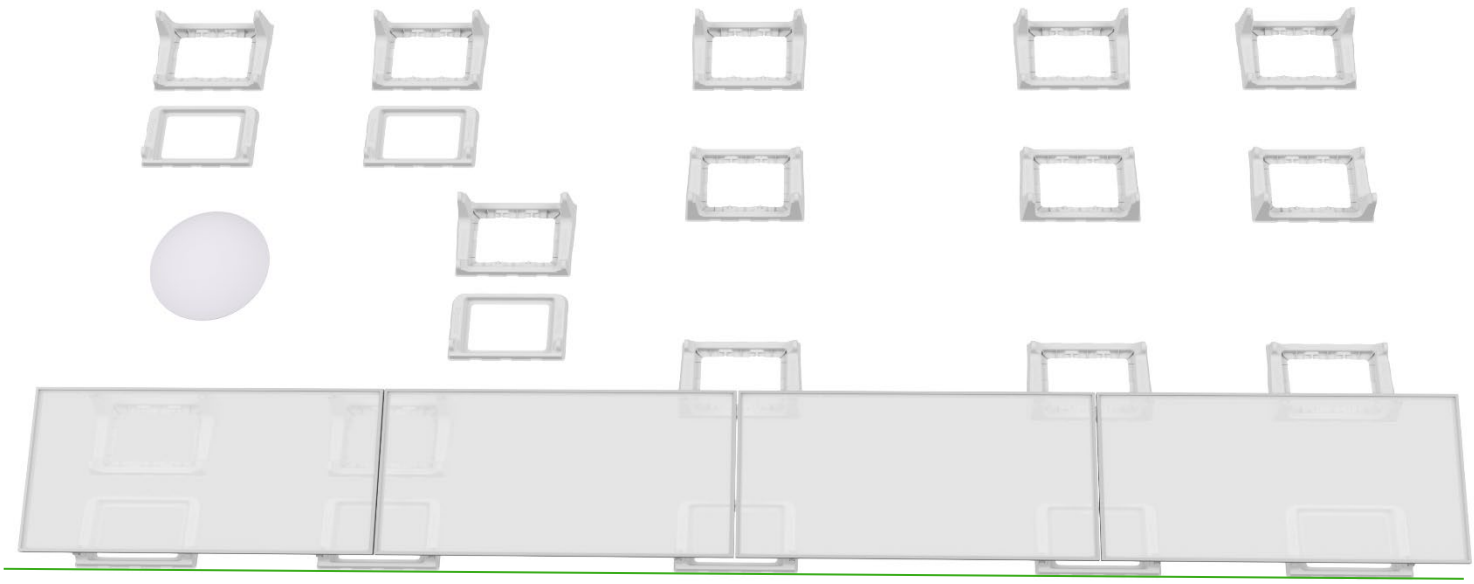

Step 10: When an obstacle impedes the progress of a row, end the row in the same manner as task eight, being. A two leg basket must be used to support the south side of this last basket set. Since this final basket set will be shifted, place a four leg basket with the short legs facing south to immediately end the column.

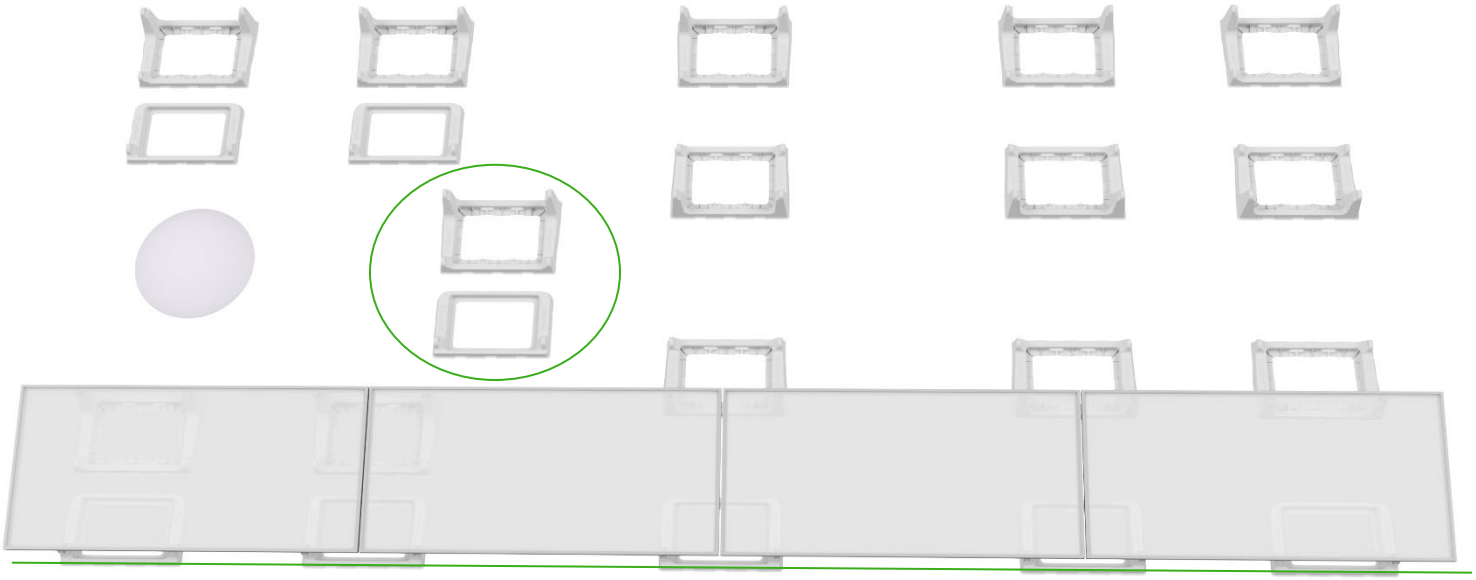

Step 11: To finish the racking for the array place four leg baskets on the north edge with the short legs facing south. Use two leg baskets in areas of column misalignment caused by the previously discussed obstacle.

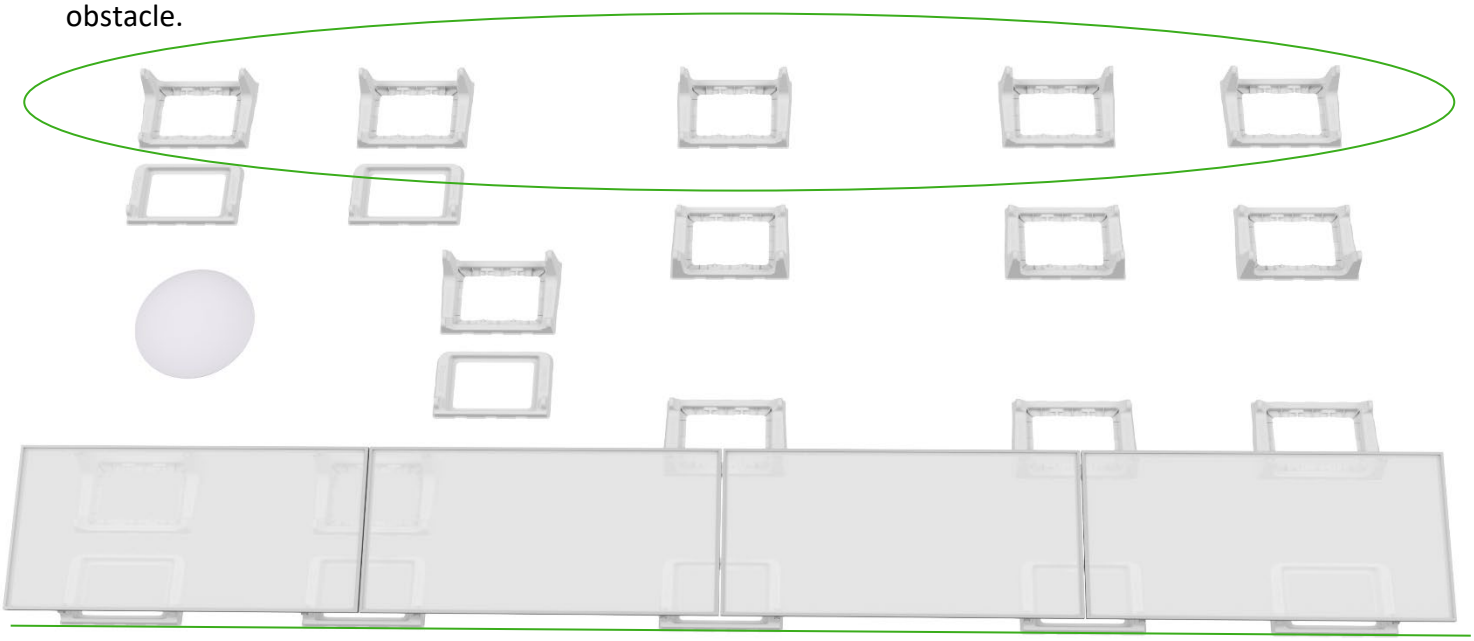

Step 12: When all baskets have been laid out. Install remaining modules on a row by row basis. Slip sheets can be added if being used once each row of modules have been completed. Ballast row and go on to next row following the same steps. Ballast blocks shall follow ASTM C1491 or C1884 where applicable. Please ensure ballast is always complete prior to leaving the jobsite.

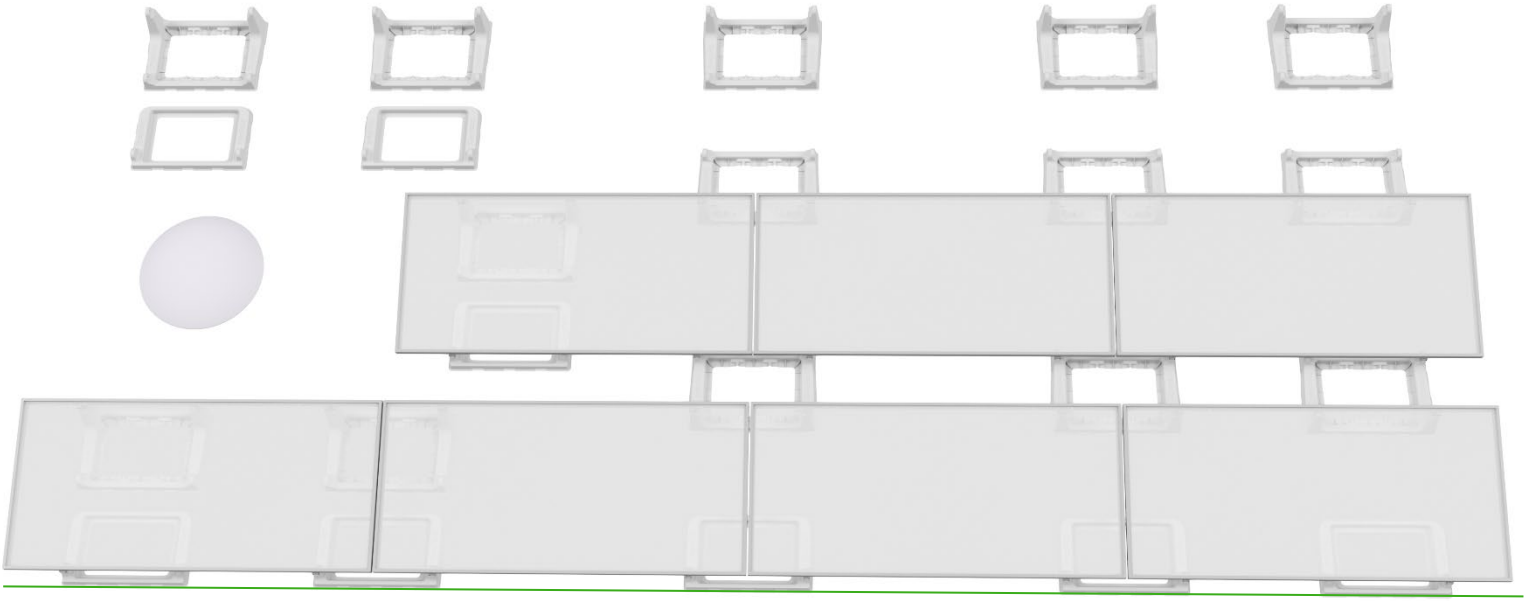

Step 1

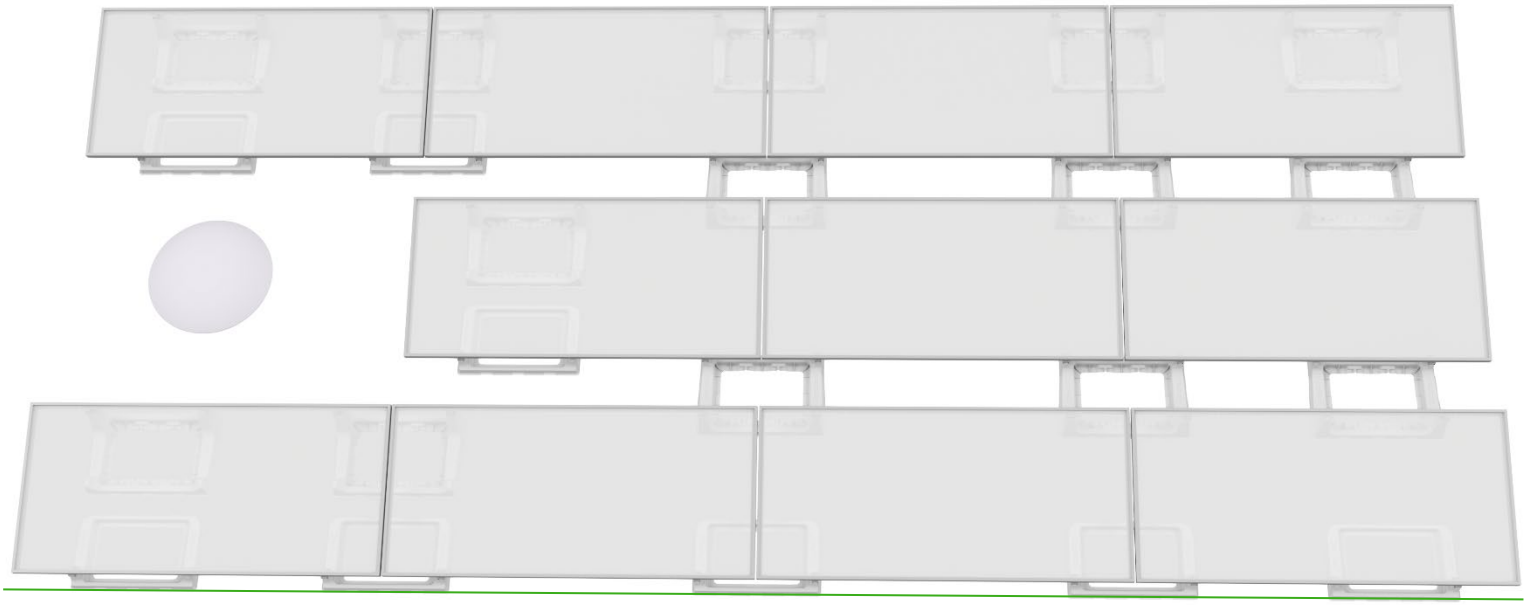

Step 2

A. Standard Module Mounting Detail

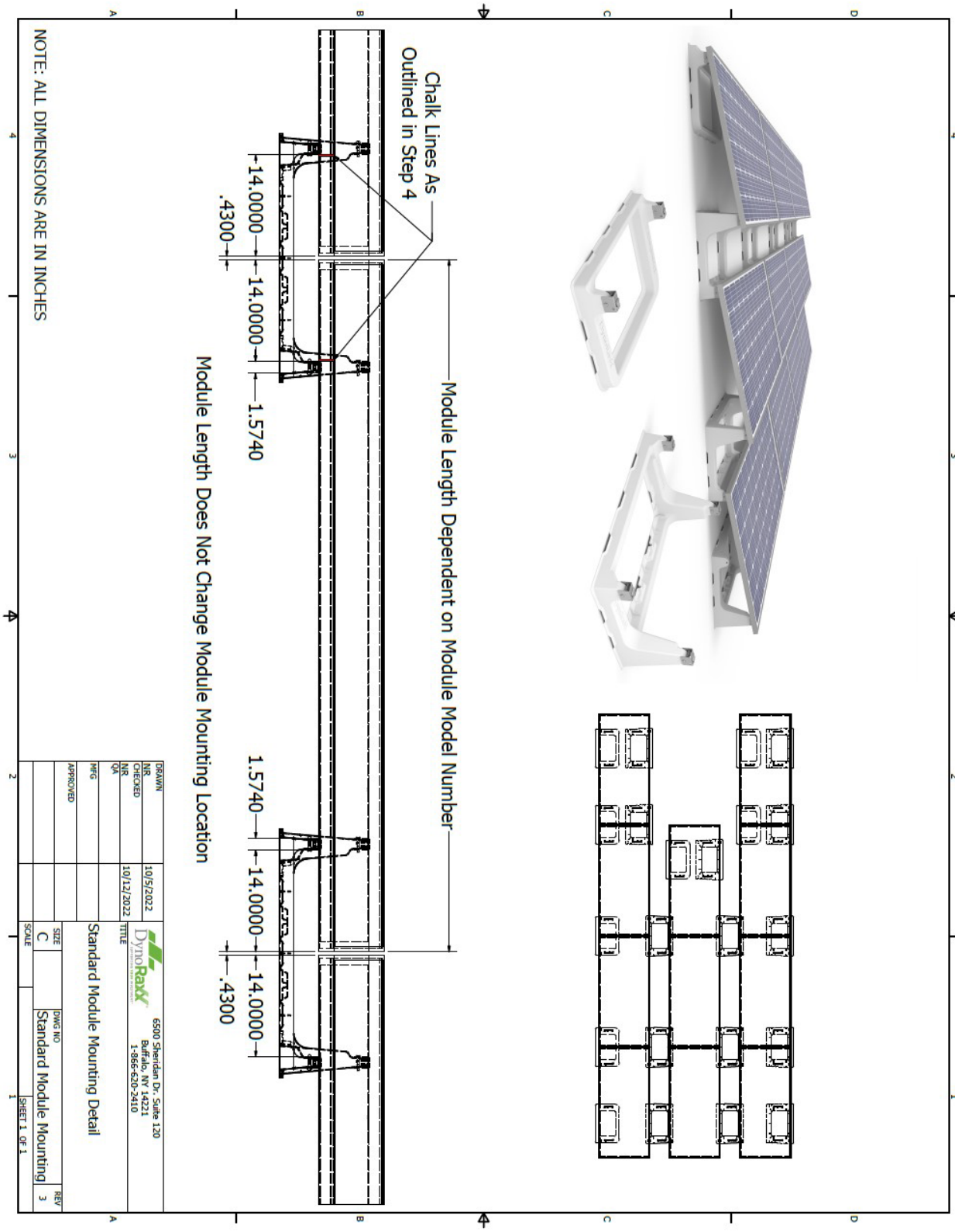
Chalk Lines As Outlined in Step 4
Module Length Dependent on Module Model Number
14.0000
14.0000
1.5740
.4300
1.5740
14.0000
14.0000
.4300
Module Length Does Not Change Module Mounting Location
DRAWN NR 10/5/2022
CHECKED NR 10/12/2022
QA
MFG
APPROVED
DynoRaxx
6500 Sheridan Dr. Suite 120
Buffalo, NY 14221
1-866-620-2410
TITLE
Standard Module Mounting Detail
SIZE C
DWG NO Standard Module Mounting
REV 3
SCALE
SHEET 1 OF 1
NOTE: ALL DIMENSIONS ARE IN INCHES

DynoRaxx Limited Warranty

A. MATERIAL AND WORKMANSHIP WARRANTY

1. DynoRaxx, Inc., ("DynoRaxx") warrants to the original registered purchaser ("Purchaser") of the [DynoRaxx® flat-roof PV ballasted racking systems/DynoRaxx® pitched roof PV mounting system] and related DynoRaxx branded accessories ("Product") for installation at the original installation site when shipped in its original container that the Product shall be free from structural defects in material and workmanship that render the Product inoperable for its intended purpose.

2. DynoRaxx agrees that for a period of twenty-five (25) years from the date of purchase by the first consumer purchaser, that DynoRaxx will, at its sole discretion, either (i) repair the defect, (ii) replace the defective Product, or (iii) compensate Purchaser the purchase price of product times full years remaining on Material and Workmanship Warranty divided by 25 years.

3. This Limited Warranty shall be effective on April 1, 2025, the "Effective Date."

4. The compensation, replacement, substitution, or repair as outlined above shall completely satisfy and discharge all of DynoRaxx's liability with respect to the Limited Warranty.

B. WARRANTY EXCLUSIONS AND LIMITATIONS

1. The Limited Warranty does not cover superficial defects such as surfaces that are scratched, chipped, oxidized, corroded or broken unless such superficial defects cause the Product to become inoperable or malfunction.

2. The Limited Warranty shall be VOID if Product is or was (a) exposed to corrosive materials or chemicals that can weaken or contribute to Product degradation or malfunction; (b) used in marine or saltwater environments; (c) used under abnormal environmental conditions including, without limitation, conditions where the Product is exposed to or in contact with water, salt, smoke, oils or fuel; (d) used on mobile units, including, without limitation, mobile homes, automobiles, boats, and other vehicles; (e) subject to abuse or misuse; or (f) dissembled and transported from its original location.

3. The Limited Warranty does not cover damage to the Product that occurs during shipment, storage, or installation. In a case where a manufacturing defect is visible at the time materials are delivered, DynoRaxx should be informed immediately upon delivery and written claim must be made within one-month after the date of delivery, and always prior to the installation of the visually defective product.

4. The Limited Warranty shall be VOID if (a) installation of the Product did not follow DynoRaxx's written installation instructions, (b) if the Product has been altered, modified, reconfigured or repaired in a manner not previously authorized by DynoRaxx IN WRITING, (d) if the Product is not installed for a purpose for which the Product was intended.

5. The Limited Warranty will be VOID if in DynoRaxx's sole judgment, a Product has been damaged or subject to misuse, negligent installation, maintenance or use, accident, abuse, alteration, vandalism, theft, excessive heat, fire, exposure to improper voltage, power surge, act of God (including lightning, floods, pests, earthquakes, extraordinary weather conditions, typhoons, hurricanes or volcanic eruptions), acid rain, corrosive environment, and actions of third parties (including acts of war or terrorist acts).

6. The Limited Warranty shall not apply if the label or serial number has been altered, removed, defaced, or is otherwise illegible or unrecognizable.

C. COVERAGE SCOPE

1. Purchaser (and not DynoRaxx) shall bear all cost relating to the return of Product to DynoRaxx including risk of loss, theft or damage during shipping. Purchaser at its own discretion may obtain insurance for shipping the Product back to DynoRaxx.

2. DynoRaxx shall not be liable under the Limited Warranty for any labor costs or for the repair, replacement or supplementation of a defective Product or for any material or parts other than defective Products that may be required to complete the repair, replacement or supplementation under any circumstances. To the extent that DynoRaxx, or its agents, are performing a repair, replacement or supplementation of a defective Product, Purchaser shall be responsible to pay DynoRaxx or its agents for all such labor costs and material or parts other than defective Products.

3. Without limiting the foregoing, DynoRaxx shall not be liable under the Limited Warranty for damage to persons or property or other loss or injury resulting from defect in the Product or from improper installation, maintenance or use. DynoRaxx will not under any circumstances be liable for any indirect, special, incidental or consequential damages of any nature, whether based on contract, tort or other legal theory including, without limitation, business interruption costs, removal and/or reinstallation costs, re-procurement costs, loss of profit or revenue, loss of data, promotional or manufacturing expenses, overhead charges, injury to business reputation or loss of customers, even if DynoRaxx has been advised of the possibility of such damages.

4. Manufacturers of related items used with Product including third party manufactured solar panels, inverters, batteries, wiring, mounts, racking systems, flashings, electrical systems, parts, supplies, and plumbing systems, if any, are not covered by this Warranty. This Warranty shall not cover replaceable parts such as fuses or breakers.

D. NO OTHER WARRANTIES

THIS LIMITED WARRANTY IS EXPRESSLY IN LIEU OF AND EXCLUDES ALL OTHER EXPRESS OR IMPLIED WARRANTIES, INCLUDING, BUT NOT LIMITED TO, THE WARRANTIES OF MERCHANTABILITY AND FITNESS FOR A PARTICULAR PURPOSE AND ALL OTHER OBLIGATIONS OR LIABILITIES ON THE PART OF DYNORAXX, UNLESS SUCH OTHER WARRANTIES, OBLIGATIONS OR LIABILITES ARE EXPRESSLY AGREED TO IN WRITING BY DYNORAXX.

E. CLAIM FILING INFORMATION

1. To file a claim under the Limited Warranty, Purchaser needs to present (1) name and contact information for Purchaser, (2) identity of distributor from whom the Product was purchased, (3) identification of all Product that fails to comply with the Limited Warranty including the serial number for each Product, (4) adequate documentation that the Product fails to comply with the terms of the Limited Warranty explicitly set forth above, and (5) adequate written proof of the date of delivery of the Product including a dated sales contract, fully executed purchase order, bill of lading, courier tracking information or other reasonable proof of the date of delivery of the Product. Please send the documentation described above to:

DYNORAXX WARRANTY CLAIMS

DynoRaxx, Inc.
6500 Sheridan Drive, Suite 120
Buffalo, NY 14221
warranty@dynoraxx.com

2. After receiving a claim, DynoRaxx will consider the documentation and have a reasonable period of time to investigate the merit of the claim under the Limited Warranty (“Claim”).

3. If in the sole discretion of DynoRaxx, the investigation of the Claim requires further physical inspection by DynoRaxx of some or all of the Product that are the subject of the Claim (“Claim Related Product"), then DynoRaxx (in its sole discretion) may issue a return material authorization (RMA) with detailed instruction and authorization for Purchaser to return a specified Product ("Return Authorized Product") to DynoRaxx.

4. DynoRaxx will not accept any Product other than a Return Authorized Product. Purchaser shall bear the cost of dissembling, packaging, shipping and, if applicable, insuring a Return Authorized Product to DynoRaxx.

5. Should DynoRaxx determine that the Limited Warranty has been breached, DynoRaxx has the option (in its sole discretion) to satisfy its obligations under this Limited Warranty with Product repair, replacement or supplementation and will issue detailed instructions which may include an RMA or a visit to the installation site. Failure to comply with an RMA or provide reasonable access during normal business hours to installation site within a reasonable period of time shall invalidate the Limited Warranty. Any Product replaced under this Limited Warranty shall become the sole property of DynoRaxx.

6. DynoRaxx may supply used or repaired Products as replacement. DynoRaxx has the right to deliver a replacement Product of a different type than the replaced Product if DynoRaxx has discontinued producing the replaced Product at the time of the claim.

7. This Limited Warranty shall be granted and construed in accordance with the laws of New York, without regard to the jurisdiction's conflict of law provisions. Purchaser agrees that any dispute over this Limited Warranty shall be exclusively resolved in the courts of Erie County, New York State.

8. If any provision of this Limited Warranty is held unenforceable or illegal by a court or other body of competent jurisdiction then such provision shall be modified to the minimum extent required so that the remainder of this Limited Warranty will continue in full force and effect.

9. This Limited Warranty is subject to change or termination by DynoRaxx without prior notice by publication on solarliberty.com and shall be applicable to all Product sold after the date of publication of such notice of revision or termination ("Termination Date").

F. PARTS AND COMPONENTS COVERED

Product covered under this revision of the Limited Warranty shall be sold after the Effective Date and before the Termination Date for the following Components:

DynoRaxx 2 Leg Baskets

DynoRaxx 4 Leg Baskets

DynoGrip

DynoPin Locking Pins

DynoFeather 2 Leg

DynoFeather 4 Leg

DynoRaxx PR Clamp